УДК 621.8 DOI 10.36910/775.24153966.2025.81.5

М.Л. Рябчиков, В.Л. Мартинюк, В.С. Пуць

Луцький національний технічний університет

ПРОЄКТУВАННЯ ЕКСПЕРТНИХ СИСТЕМ ДЛЯ СТВОРЕННЯ СПЕЦІАЛЬНИХ ВАЛІВ З РІДИННИМ КЕРУВАННЯМ ДЛЯ ІННОВАЦІЙНИХ МАШИН

У статті розглядається розробка теоретичних основ проєктування та розрахунку валів і роликів, заповнених рідиною – ключових елементів сучасних машин, що на сьогодні не мають повного теоретичного узагальнення. Ці елементи є критично важливими для передових фізико-хімічних технологічних процесів, таких як вакуумно-плазмова металізація, нанесення голографічного покриття та електронне хромування, і переважно висвітлюються в патентній літературі за відсутності ґрунтовних наукових досліджень. У роботі запропоновано системний підхід до аналізу, класифікації та синтезу різних типів рідинно-керованих валів на основі морфологічного аналізу. Сформовано загальну теорію, що базується на структурних ознаках, регуляторних параметрах, принципах гідродинаміки та енергоефективності. У дослідженні визначено та класифіковано функціональні групи і взаємопов'язані компоненти, що дає змогу логічно синтезувати нові системи валів з покращеними тепловими й механічними властивостями. Показано можливість створення понад п'ятнадцяти класів валів з рідинним керуванням і спрогнозовано пристрої з новими якісними характеристиками, такими як змінна здатність до прогину та регулювання температури. Результуюча теоретична модель є основою для проєктування високоефективних і конкурентоспроможних елементів машин, призначених для роботи у вакуумних умовах та спеціалізованих промислових середовищах.

Ключові слова: *вал, ролик, листовий матеріал, морфологічні ознаки, експертна система.*

M. Riabchykov, V. Martyniuk, V. Puts

DESIGN OF EXPERT SYSTEMS FOR CREATION OF SPECIAL SHAFTS WITH LIQUID CONTROL FOR INNOVATIVE MACHINES

This paper addresses the development of theoretical foundations for the design and calculation of fluid-filled shafts and rollers-key components in modern machines that currently lack comprehensive theoretical generalization. These elements, critical for cutting-edge physicochemical technological processes such as vacuum plasma metallization, holographic coating, and electron chromium plating, are primarily documented in patent literature with limited academic research. The work proposes a systematic approach to analyzing, classifying, and synthesizing various types of liquid-regulated shafts using morphological analysis. A general theory is formulated based on structural features, regulatory parameters, fluid dynamics principles, and energy efficiency considerations. The study identifies and categorizes functional groups and interrelated components, enabling the logical synthesis of novel shaft systems with enhanced thermal and mechanical properties. It demonstrates the feasibility of creating over fifteen classes of fluid-filled shafts, predicting devices with advanced qualities such as variable deflection and temperature regulation. The resulting theoretical model provides a foundation for the design of highly efficient, competitive machine components applicable in vacuum environments and other specialized industrial settings.

Key words: *shaft, roller, sheet material, morphological features, expert system.*

1. Relevance of research

The essence of the scientific problem considered in the work is to develop the basic principles of calculation and design of shafts and rollers with liquid control - the elements of machines that have not yet found a theoretical generalization. Information about these shafts is contained, mainly in a large number of patent sources, and in a very limited amount of theoretical work related to the specific tasks of their use.

The basis for the development of this direction is the need to introduce into real machines the latest physical and chemical technological processes that can create high quality competitive products, the mandatory elements of which must be shafts, the surface parameters of which are determined by the parameters of the fluid supplied inside [1-2]. Such processes include methods of vacuum - plasma metallization of polymer films [3-4], methods of holographic coating [5], processes of electron chromium plating [6], etc.

The above processes involve the use of thin films, which undoubtedly require high accuracy requirements [7-8].

Creating new machines that meet modern requirements and use the latest technological processes is thus impossible without developing the theoretical basis of calculation and design of fluid-filled shafts that would best ensure the operation of these devices in accordance with their tasks.

The purpose of the work is a comprehensive solution to the problem of creating high quality competitive shafts with fluid control, mainly for the latest physicochemical technologies taking into account the work in complex conditions of vacuum or special environments, by developing the theoretical basis of their design, the implementation of various design options shaft circuits, fluid supply systems and solutions to some topical and complex issues in the technology of their production.

2. Analysis of fluid-driven shaft systems

Modern technologies of processing of rolled materials (fabrics, polymer films, artificial leather, etc.) in a number of cases involve the application of heat flux to the surface of the material. In the process of dyeing, lamination, vacuum metallization and other surface-related material [9-10], the process from the point of view of the end result is desirable to accompany the minimum heating of the material to be treated. Given the low heat resistance and thermal conductivity of typical roll materials, as well as the sufficiently high value of heat flows (in vacuum metallization installations, for example, they can reach 30-50 kW / m2), the problem of timely removal of this flow from the material is quite urgent. It would be desirable for this heat to be removed at the same time as the technological process, which also involves the transportation of the material being processed.

The device that meets these requirements may be a liquid-cooled shaft (Fig. 1).

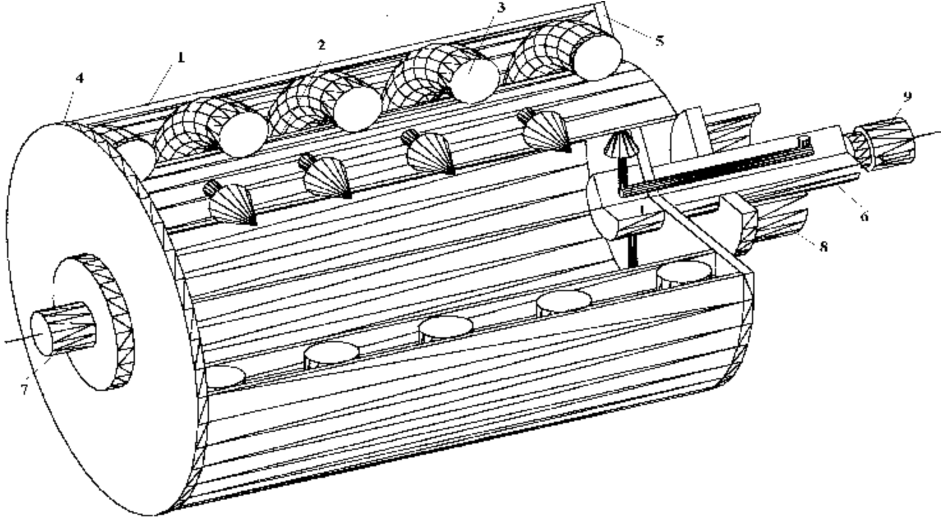

Fig.1. **Typical scheme of the shaft with liquid cooling**

There are known to be some recommendations for shaft tolerances for connecting to rolling bearings. The results obtained above demonstrate that these tolerances can be broken in the process of temperature deformation. In case of sufficiently low temperatures, the bearing must be removed from the range of temperature deformations.

This requirement is exacerbated by the requirements of vacuuming the device. The movable insertion of the pin into the vacuum chamber can only be accomplished with the use of the vacuum oil that fills the cavity between the two rubber seals at low temperatures, vacuum oil loses its properties. This unit must also be removed beyond the limits of cryogenic temperatures.

The possible design of the device to meet all the specified requirements is shown in Fig. 2.

In the drawing, the liquid-cooling shaft 1 (shown partially to the right) is located in a vacuum chamber, and the drive shaft of the shaft 2 extends outward through the metal wall. Two longitudinal drills are made in the shaft, which end in the middle of two pipe fittings that feed the fluid to the shaft and drain it. Exterior openings extend to the cylindrical surface of the shaft.

The vacuum seal set is located in the housing 3 and is closed by a lid. The housing of the fluid supply device is separated from the housing of the vacuum seals by a heat-insulating ring 12. This provides insulation of the cold housing 10 with cryogenic liquid from the "warm" housing 3. The cryogenic housing is closed by a lid. The vacuum seal is in the form of two conventional rubber-metal seals 5, the cavity between which 6 is filled with vacuum oil. The cavity has openings with fittings, which allow circulation of the heated vacuum oil, since it provides the best seal under certain temperature conditions. To ensure the best temperature conditions for the operation of the vacuum seals and the bearing 4, their assembly is located not on the shaft with the flow of coolant, but on a thin-walled cylinder that is connected to the shaft by a thin-walled plate.

The supply-drain housing has two outlet pipes 7, 8, one of which enters the supply cavity and the other enters the discharge cavity. The cavities are removed from each other and from the outside by rubber-metal seals 11.

For sealing is selected rubber version IV, which provides normal operation to temperatures of -60oC. In the case of lower temperatures, it is possible to individually seal the standard shape and size of tefal.

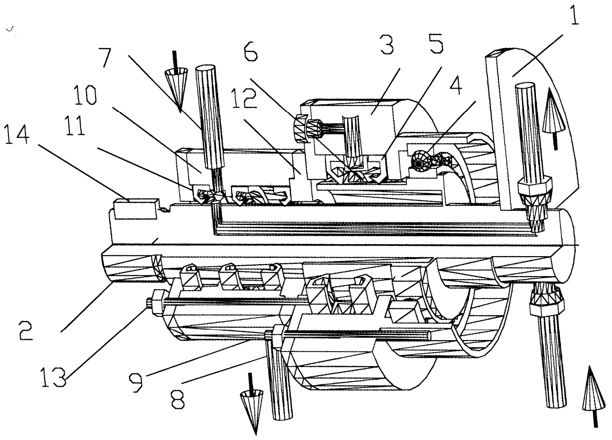

Fig. 2. **The design of the pin supply fluid test shaft for vacuum metallization of the polymer film**

The ring 12 and the cap with conical projections provide support for seals in the event of high pressure. The drive shaft has a free exit from the system of seals with a keyway or a slotted slot to bring it to rotation.

The shaft with hydraulic adjustment of the bend can be safely attributed to the fluid-filled rotating devices, it has the basic properties of liquid-filled devices.

Such shafts can find use in a variety of industries. First of all, this relates to the areas related to the processing of long dimensional sheet materials, in which the deformations of the structural units have an order similar to the thickness of the material being processed.

The main part of the shaft with adjustable deflection (Fig. 3) is its outer shell 1, which directly touches the material being processed, and is therefore obliged to have a surface of very high purity and accuracy. The shell is supported by two roller bearings 2, the dimensions of which are determined primarily by the bearing capacity of the shaft. As will be shown below, the dimensions of the rollers in the bearings must be limited in order to ensure that the shaft operates. The bearings connect the sheath to the core 3, which hole 4 is drilled to pass fluid under pressure. It should be noted that the fluid in this case is fed through a fixed core, which greatly simplifies the design of the fluid supply. In practice, these devices are reduced to standard fixed seals.

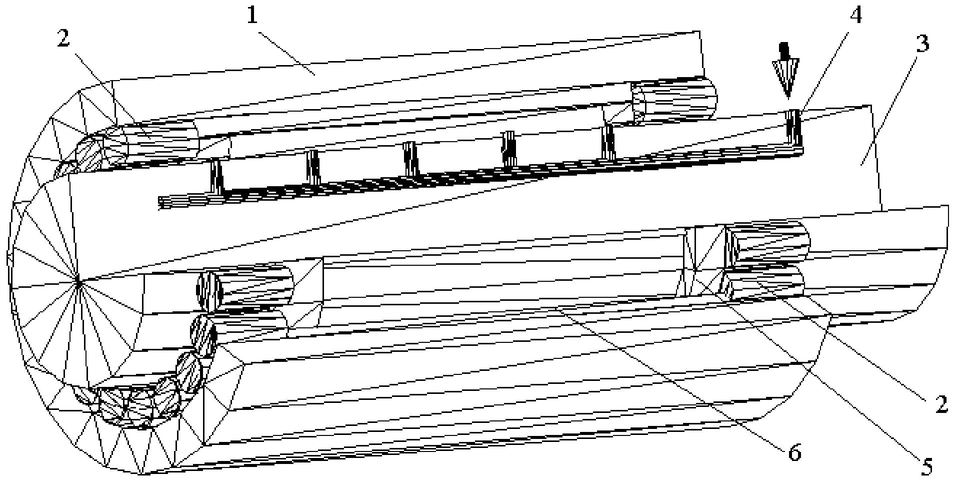

Fig. 3. **Fluid-filled shaft with hydraulic deflection adjustment**

The considered shafts and rollers directly touch the treated material, and the liquid, in its own right, controls the condition of the outer surface of the device.

A deeper study of the possible uses of liquid filled devices demonstrates the possibility of other management principles.

3. Development of methods of construction of fluid-filled shafts based on the system of features

The analysis of the operation of the main types of shafts with fluid control allows to synthesize the general theory of such shafts by generalizing the data obtained and possible extrapolation of these data to other devices.

The general theory of liquid-filled shafts should describe, explain and predict the operation of a certain set of constituent elements of their elements. In accordance with the principle of conformity, the transition to such a theory should be based on the theoretical principles of designing liquid-filled shafts, while holding them in a definite form. Due to this, in some cases it is possible to return to the previous theory in some area. This transition, in particular, was formally made in determining the technological modes of shaft treatment. This process, based on the principles developed in the work, can also be applied to conventional shafts.

The proposed theory of liquid-filled shafts is based on the categories of part and whole, which express the relationship between the set of elements of these devices and the connections that combine these elements and lead to the appearance of integrative properties and patterns that are not peculiar to individual elements in their separation. Through this connection should come "whole" - liquid-filled shaft, in respect of which the individual elements act as parts.

In this connection, it is necessary to consider the structure of the shaft in the most general form, which expresses the structure and the internal form of organization of these shafts, which acts as the unity of stable relationships between its elements, as well as the laws of these relationships. Structure is an integral attribute of a fluid filled shaft.

All previous data presented and proved in this work characterize a fairly high level of correspondence between the structures of different liquid filled devices. In this regard, it is reasonable to say that each fluid-filled shaft is similar in relation to the existing one, since each element of one shaft corresponds to an element of another and each connection in one device corresponds to a connection in the other and back.

The resultant graph of connections of the fluid-filled shaft, taking into account the elements and properties and connections found in the previous sections, is shown in Fig. 4.

The graph shows the main elements and properties of a fluid-filled shaft.

Analysis of the fluid-filled device allowed us to distinguish such basic groups of properties and features that characterize the structure of the fluid-filled shaft.

Group B_0 determines the superstructure of the shaft. The elements of this group differ depending on how separately the operation of the fluid-filled shaft is considered. The B_{01} element defines the operation of the individual shafts, which is why the previous words were devoted. The element B_{02} provides for the operation of the shafts in the machine complex.

Group B_1 specifies the particularities associated with the parameter that prevails in regulation. Individual subgroups of this group: B_{11} – temperature; B_{12} – pressure.

The elements of these two subgroups can in turn be divided into the following elements:

$B_{1,1}^{1}$ - lowering the temperature; B_{11}^{11} - temperature, constant in length; B_{11}^{12} - temperature varying in length; B_{11}^{2} - increase of temperature; B_{12}^{1} - deflections of a shaft cover; B_{12}^{11} - compensation for unwanted deflections; B_{12}^{111} - with external regulation; B_{12}^{112} - with self-regulation; B_{12}^{12} - regulation of deflections according to a given law; B_{12}^{2} - deformation of additional elements.

Group B_2 defines the calculation features related to shaft quality assurance. There are two main subgroups in this group: B_{21}- Shaft shell parameters; B_{22} - boundary zone parameters (experimentally determined);

Unlike the previous group, the subgroups of this group are compatible, ie they must act together. In the subgroups we distinguish the following elements: B_{21}^{1} - connecting the shaft sheath to the bearing pins at the borders; B_{21}^{11}- short shafts; B_{21}^{12} - average shafts with geometric; B_{21}^{121} - with the possibility of compensation of deflections; B_{21}^{122} - with the inability to compensate for deflections; B_{21}^{13} - long shafts; B_{21}^{2} - connecting the shaft sheath to the support shaft by means of a tensioning landing; B_{22}^{1}- rigid boundary zones; B_{22}^{2} - transitional boundary zones; B_{22}^{3} - “soft” boundary zones.

Group B_3 defines the principles of fluid motion through the shaft and includes the following elements: B_{31} - longitudinal partitions; B_{32} - cross-sections.

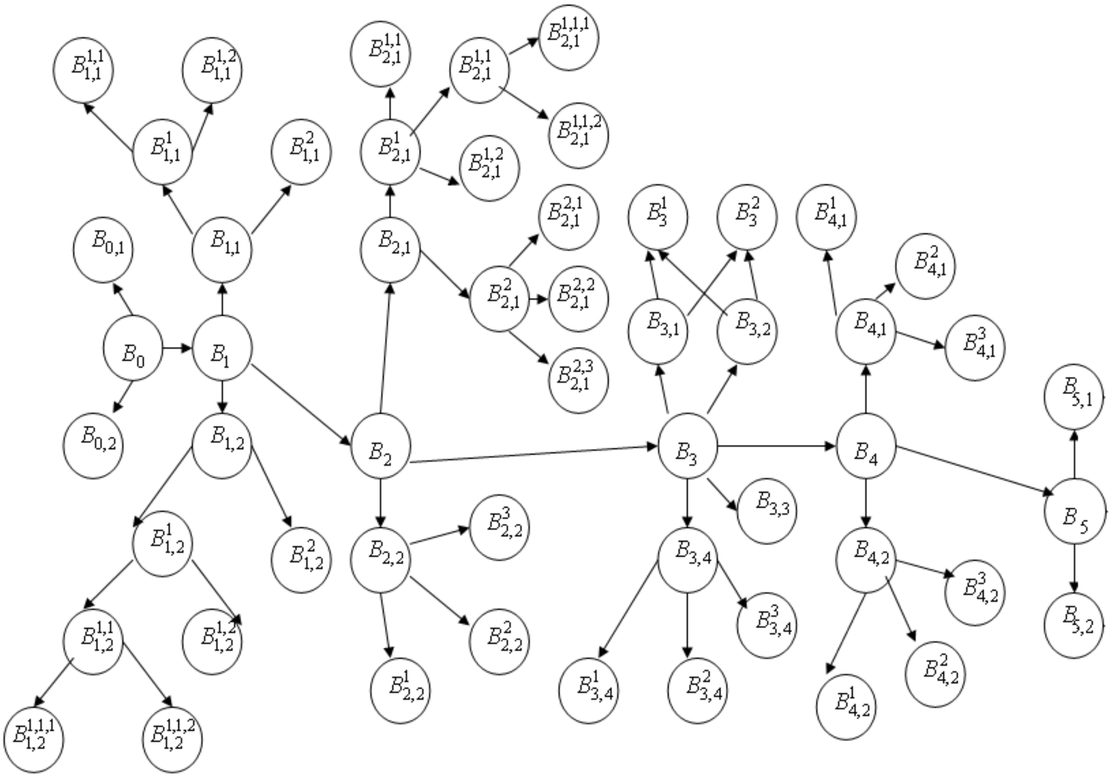

Fig. 4. **Graph of signs of a liquid-filled shaft**

These two elements can include either: B_3^1 - free dressing of the shell on the partitions; B_3^2 - landing of a shell on tension partitions.

In addition, there are possible elements: B_{33} - grooves in the shaft; B_{34} - channel between shell and core; B_{34}^1 - fluid delivery from the middle of the shaft; B_{34}^2 - supply of liquid from the sides of the shaft; B_{34}^3 - supply of liquid on one side.

Group B_4 specifies the peculiarities of the fluid flow into the shaft cavity. It has two main subgroups: B_{41} - submission principles; B_{42} is a kind of liquid.

Subgroups include the following elements: B_{41}^1 - axial system; B_{41}^2 - system with side exits; B_{41}^3 - system with inclined outputs; B_{42}^1 - ordinary liquid; B_{42}^2 - cryogenic fluid; B_{42}^3 - high temperature liquid.

Group B_5 describes the principles of energy conservation in the design and operation of liquid-filled shafts. This group may include: B_{51} - choose the best value for money; B_{52} - select the optimal channel layout; B_{53} - Other organizational principles of economy.

A morphological map can be developed on the basis of a graph of a liquid-filled shaft organization. The following general map is shown below (Table 1). The map has five main groups. In the morphological analysis, we select the features or elements from the right column in each group.

Given the number of finite elements in each group, it is possible to anticipate a large number of combinations of key features and the appearance of shafts with new properties. As a preliminary step, we need to identify the basic rules by which individual attributes can be grouped together.

Let us look at the possibility of combining a large number of features of this group with the ability to create objects with new quality properties. Thus, the simultaneous integration of free dressing of the annular and longitudinal partitions with the channel between the shell and the core with the combined flow of fluid through the channels in the shaft can give a universal shaft with the possibility of adjusting the bend at any point and in any direction (Fig. 5).

Such a shaft can be written in plural form

$$W=\begin{pmatrix}\left(\left(B_{11}^{11}\wedge B_{11}^{12}\right)\wedge B_{11}^{2}\right)\vee\left(B_{12}^{11}\wedge B_{12}^{12}\right),\left(B_{21}^{1}\vee B_{22}^{2}\right),\\ \left(B_{31}\vee B_{3}^{1}\right)\vee\left(B_{32}\vee B_{3}^{1}\right)\vee B_{33}\vee\left(B_{34}^{1}\vee B_{34}^{3}\right),\\ B_{41}\vee\left(B_{42}^{1}\wedge B_{42}^{2}\wedge B_{42}^{3}\right),B_{5}\end{pmatrix}.$$

Table 1.

Common morphological map of a fluid filled shaft

B_1				B_2				B_3		B_4		B_5
B_{11}	B_{11}^{1}	B_{11}^{11}		B_{21}	B_{21}^{1}	B_{21}^{11}		B_{31}	B_{3}^{1}	B_{41}	B_{41}^{1}	B_{51}
		B_{11}^{12}				B_{21}^{12}	B_{21}^{121}		B_{3}^{2}		B_{41}^{2}	
	B_{11}^{2}						B_{21}^{122}	B_{32}	B_{3}^{1}		B_{41}^{3}	B_{52}
B_{12}	B_{12}^{1}	B_{12}^{11}	B_{12}^{111}			B_{21}^{13}			B_{3}^{2}	B_{42}	B_{42}^{1}	
			B_{12}^{112}		B_{21}^{2}			B_{33}			B_{42}^{2}	B_{53}
		B_{12}^{12}		B_{22}	B_{22}^{1}			B_{34}	B_{34}^{1}		B_{42}^{3}	
	B_{12}^{2}				B_{22}^{2}				B_{34}^{2}	-		-
-					B_{22}^{3}				B_{34}^{3}			

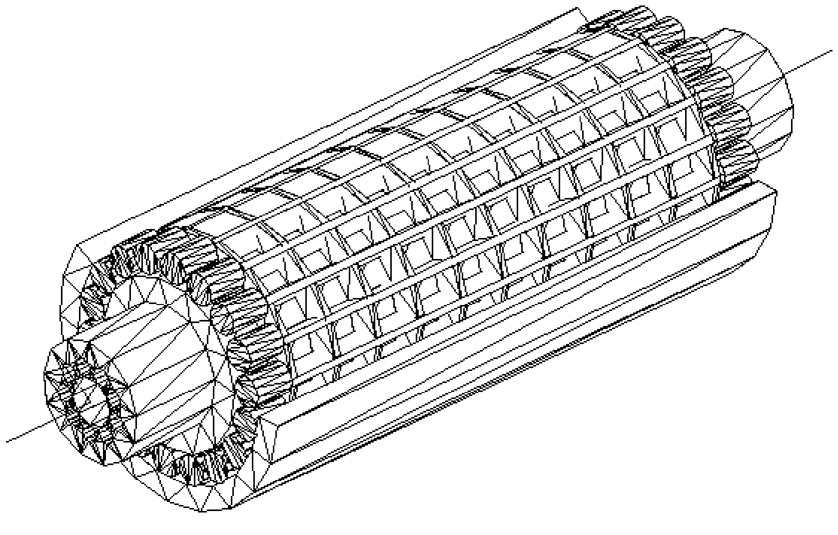

Fig. 5. **Multi-chamber shaft with combination of third group features**

We will base our general approaches to the formation of fluid-filled shaft theory on the calculation of utterances by means of sentient relations. In this case, complex shaft systems are composed of elements of the graph of morphological features, and in a formalized form, each shaft will be a complex statement consisting of simple features by means of actions that can be expressed meaningfully as "and" ("Dressing a tension shell "And" Axial fluid flow "), known in mathematics as conjunction of signs," or "(" Screw partition "or" Axial partition "), known as disjunction," no "(" No partition ") , what we will call an objection, "if ... then" (as at long shaft, it can have properties of self-regulation).

The most common case of a fluid filled shaft with the above formalized merger rules will be

$$\begin{bmatrix}\left(\left(B_{11}^{11}\vee B_{11}^{12}\right)\vee B_{11}^{2}\right)\wedge\left(\left(B_{12}^{11}\vee B_{12}^{12}\right)\neg B_{12}^{2}\right)\wedge\left(\left(B_{21}^{11}\vee B_{21}^{12}\vee B_{21}^{13}\right)\neg B_{21}^{122}\right)\wedge\\ \left(B_{22}^{1}\vee B_{22}^{2}\vee B_{22}^{3}\right)\wedge\left(\left(B_{31}\vee B_{32}\vee B_{33}\vee B_{34}\right)\wedge\left(B_{34}^{1}\vee B_{34}^{2}\vee B_{34}^{3}\right)\wedge\left(B_{3}^{1}\vee B_{3}^{2}\right)\right)\wedge\\ \left(\left(B_{4}^{1}\vee B_{4}^{2}\vee B_{4}^{3}\right)\wedge\left(B_{41}^{1}\vee B_{42}^{2}\vee B_{43}^{3}\right)\right)\wedge\left(B_{51}\wedge B_{52}\wedge B_{53}\right)\end{bmatrix}$$

Within the general theory, the cooling shaft can generally be written as

$$\left(B_{11}^{1} \wedge B_{21}^{1} \wedge B_{31} \wedge B_{41}^{1} \wedge B_{42}^{1}\right).$$

complex shaft with arbitrary law of temperature and deflection distribution along the length

$$\left(\begin{array}{l} \left(\left(B_{11}^{11} \wedge B_{11}^{12}\right) \wedge B_{11}^{2}\right) \vee \left(B_{12}^{11} \wedge B_{12}^{12}\right) \wedge \left(B_{21}^{1} \vee B_{22}^{2}\right) \wedge \\ \left(B_{31} \vee B_{3}^{1}\right) \vee \left(B_{32} \vee B_{3}^{1}\right) \vee B_{33} \vee \left(B_{34}^{1} \vee B_{34}^{3}\right) \wedge B_{41} \vee \left(B_{42}^{1} \wedge B_{42}^{2} \wedge B_{42}^{3}\right) \wedge B_{5} \end{array}\right),$$

Existing or perspective shafts are synthesized by combining different principles or features from the above morphological maps. Based on this approach, the previous sections have demonstrated the real ability to create more than fifteen shaft classes, of which only five are actually existing systems. Three classes of devices work in experimental-industrial installations which the authors was engaged in development. For seven classes theoretically proved the possibility and relevance of creation. These systems are based on the analysis of various approaches to the combination of parameters that determine the peculiarity of the shaft.

4. Conclusions

The scientific problem consists in the development of the theoretical bases for the design of liquid-filled shafts, research, analysis and creation of new systems of shafts with liquid regulation, mainly for the latest physicochemical technologies, which ensure their high technical competitiveness. The morphological analysis of the fluid-filled shaft, which follows from the regularities of its structure, is conducted. Based on a compiled list of characteristic parameters, partial solutions are implemented that are implemented in specific types of liquid-filled shafts. Morphological maps were constructed, with the help of which functional values of possible combinations of basic features were determined, on the basis of which the appearance of devices with new qualities (with variable deflection, with variable length of temperature) was predicted. The scientific theory of liquid-filled shafts was developed in the form of a system of basic features (the predominant parameter in regulation, calculation peculiarities, principles of fluid motion through the shaft, principles of fluid supply, energy saving principles) and rules of their unification, which allow to obtain devices with new qualities by means of logical synthesis. The general properties of structural structures are reflected in certain partial patterns operating within the limits of this theory, which should be taken into account when constructing specific shafts. Similar patterns are formulated for some specific cases of fluid-filled devices: a fluid-cooled drum, a hydraulic deflection shaft, a fluid-heated roller, and a shaft with adjustable movable elements.

References

1. Decheng Jia, Chunsheng Zhang, Runzhou Dong, Haida Zhang, Xinliang Gao, Xiaoyong Feng, Zhinan Yang, Fucheng Zhang, Driving martensitic transformation through pre-cold deformation: Unveiling the mechanism of microstructural evolution in martensite bearing steel, Materials & Design, Volume 252, 2025, 113788, https://doi.org/10.1016/j.matdes.2025.113788.

2. Wang F, Lin Z, Zhang H, Zhang C, Xu B. A compact hydro-mechanical transmission solution to wheel loader propulsion system and its control strategy. *Proceedings of the Institution of Mechanical Engineers, Part D*. 2023;238(13):4114-4128. https://doi:10.1177/09544070231191157.

3. Mehta, A., Vasudev, H. & Thakur, L. Application of cold spray technology in design and manufacturing of complex geometries. *Int J Interact Des Manuf* 18, 5407–5425 (2024). https://doi.org/10.1007/s12008-024-01826-x.

4. Ana M. Sousa, Ana M. Amaro, Ana P. Piedade, Optimising metallic coatings strategies for enhanced surface performance of bioresorbable polymeric stents, Applied Surface Science Advances, Volume 25, 2025, 100669, https://doi.org/10.1016/j.apsadv.2024.100669.

5. Heena, Komal Sharma, Kamlesh Kumar, Bhargab Das, Raj Kumar, Uniform holographic films of acrylamide/polyvinyl alcohol photopolymer using an automatic film applicator based on doctor blade technique, Progress in Organic Coatings, Volume 187, 2024, 108108, https://doi.org/10.1016/j.porgcoat.2023.108108.

6. Šapek, A., Kalin, M., Godec, M. *et al.* Effect of feed rate during induction hardening on the hardening depth, microstructure, and wear properties of tool-grade steel work roll. *J Mater. Sci: Mater Eng.* 19, 42 (2024). https://doi.org/10.1186/s40712-024-00193-5.

7. Peng Chen, Shihong Lu, Surface forming mechanism and numerical simulation study in four-roll flexible rolling forming, Heliyon, Volume 10, Issue 23, 2024, e40166, https://doi.org/10.1016/j.heliyon.2024.e40166.

8. Cao, L., Wang, Z., Hu, D. *et al.* Pressure-constrained sonication activation of flexible printed metal circuit. *Nat Commun* 15, 8324 (2024). https://doi.org/10.1038/s41467-024-52873-7.

9. Wenyou Zhang, Silvia Marola, Seán McConnell, Zhe Cai, JanMell Dugenio, Ming Li, William M. Abbott, Asli Coban, Arnoldas Sasnauskas, Shuo Yin, Ramesh Padamati Babu, Wajira Mirihanage, Riccardo Casati, Rocco Lupoi, Demonstration and benchmarking of a novel powder sheet additive manufacturing approach with austenitic steel, Materials & Design, Volume 245, 2024, 113301, https://doi.org/10.1016/j.matdes.2024.113301.

10. Abdulamier A. Abdulamier, Lina M. Shaker, Ahmed A. Al-Amiery, Advancements in the chemistry of contact Lenses: Innovations and applications, Results in Chemistry, Volume 12, 2024, 101872, https://doi.org/10.1016/j.rechem.2024.101872.

11. Jain, Y.P., Grandi, D., Groom, A., Cramer, B., McComb, C. MSEval: A Dataset for Material Selection in Conceptual Design to Evaluate Algorithmic Models**,** Journal of Mechanical Design, 2025, 147(4), 044502, https://doi.org/10.1115/1.4067453.

12. Bhattacharya K, Majumder A, Bhatt AN, et al. Developing a method for creating structured representations of working of systems from natural language descriptions using the SAPPhIRE model of causality. Artificial Intelligence for Engineering Design, Analysis and Manufacturing. 2024;38:e24. https://doi:10.1017/S0890060424000118.

13. Mandičák T, Behúnová A, Mésároš P. Artificial Intelligence in the Sustainable Design and Manufacturing of Products in Civil Engineering in the Context of Industry 4.0. *Machines*. 2024; 12(12):919. https://doi.org/10.3390/machines12120919.